Ölind Design

TECHNICAL DATA SHEET

10 YEAR WARRANTY

NORRMALM TALL BASIN MIXER

SVER-H2017

Specifications

Brand	ÖLIND
Range	NORRMALM
Product code	SVER-H2017
Finish/Colour	CHROME, MATTE BLACK, BRUSHED GOLD, GUNMETAL BRUSHED NICKEL, GLOSSY WHITE
Product type	BASIN MIXER
Material	BRASS
Configuration	1 TAP HOLE
Mounting Type	DECK MOUNTED

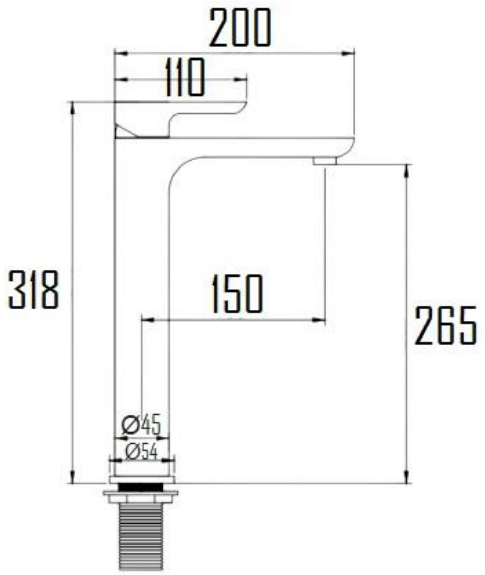

For more information, please visit our website: olind-design.com
Sweden: Dalkärrsvägen 6 14636 Tullinge Sweden